NoWaste

Heat Re Use system for Heavy Commercial Vehicles

Thedore Sams

AVL

Carloandrea Malvicino,
Centro Ricerche Fiat

Project general information

Project full title:	Waste heat Re Use system for Heavy Commercial Vehicles
Coordinator:	Carloandrea Malvicino Centro Ricerche Fiat
Project major partners:	Volvo, AVL, FAURECIA, Dell'Orto, Universiy of Liege
Starting Date:	**1st October 2011**
Ending Date:	**30th March 2015**
Budget Total/Funding:	4.5 MEUR / 2.7 MEUR
Type of project:	Collaborative Project

Motivation, Objectives and Milestone plan

Motivation

Reduction of vehicle fuel consumption (-10% in real use) recovering the engine waste by means of a Rankine Cycle and production of electrical energy to supply all the vehicle and engine auxiliaries

Objectives

- Rig demonstrator with technical solutions to re-use the vehicle waste heat) electrical energy
- Vehicle demonstrator

Milestones plan

Concept study :	month 12
Bench validation:	month 24
On board validation:	month 36

Clustering

The project is clustered with CORE and periodic common meeting

The Consortium

Centro Ricerche Fiat

Volvo

AVL

Faurecia

Dell'Orto

Universiy of Liege

CHALLENGES

Challenge 1: CO_2 emission reduction in Real Use

Challenge 2: heat rejection

Challenge 3: Compliancy with hybrids powertrains

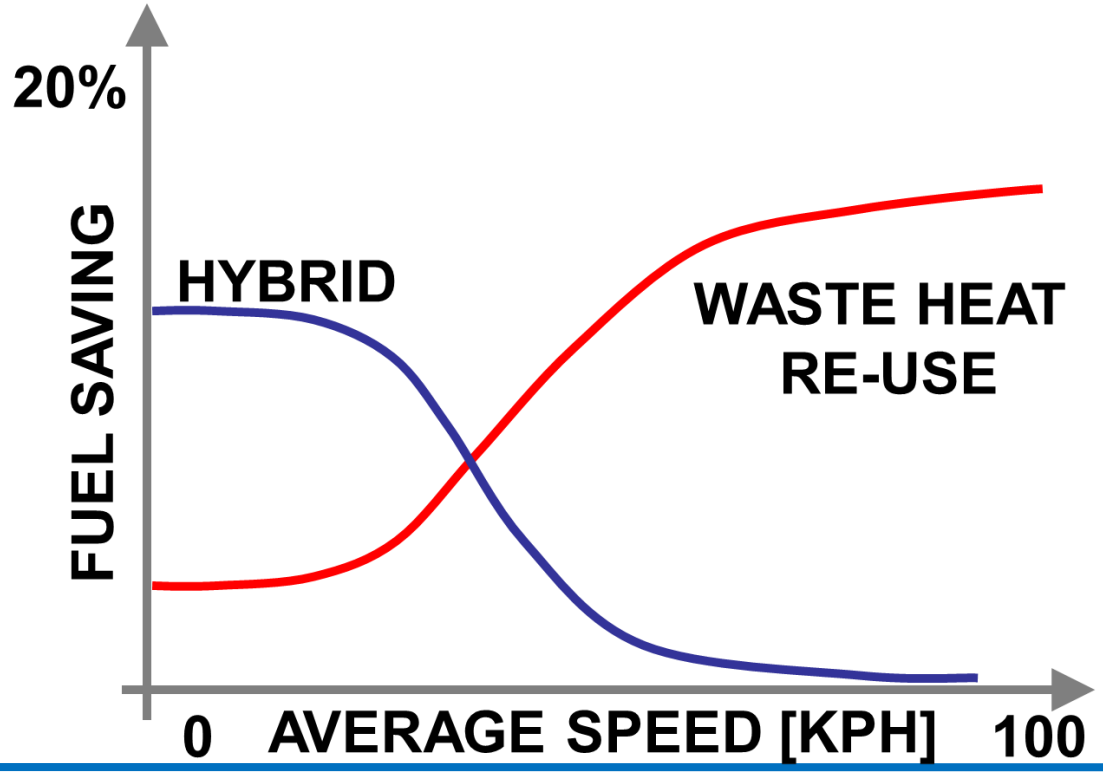

System Concept

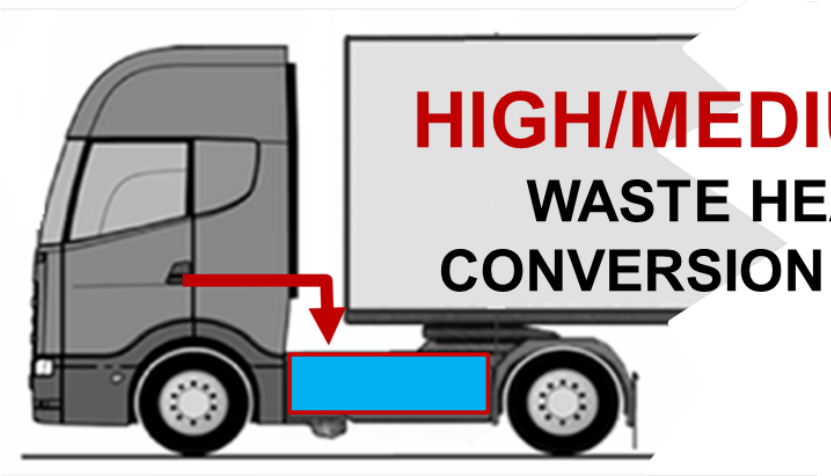

HIGH/MEDIUM ENGINE LOAD

WASTE HEAT RECOVERY AND CONVERSION IN ELECTRIC ENERGY

IDLING/LOW ENGINE LOAD

STORED ELECTRIC ENERGY USE FOR ON BOARD SYSTEMS AND HYBRID POWERTRAIN

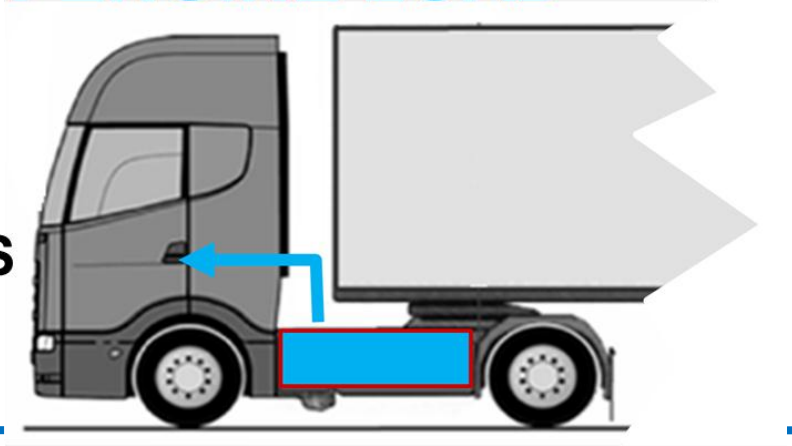

Timing

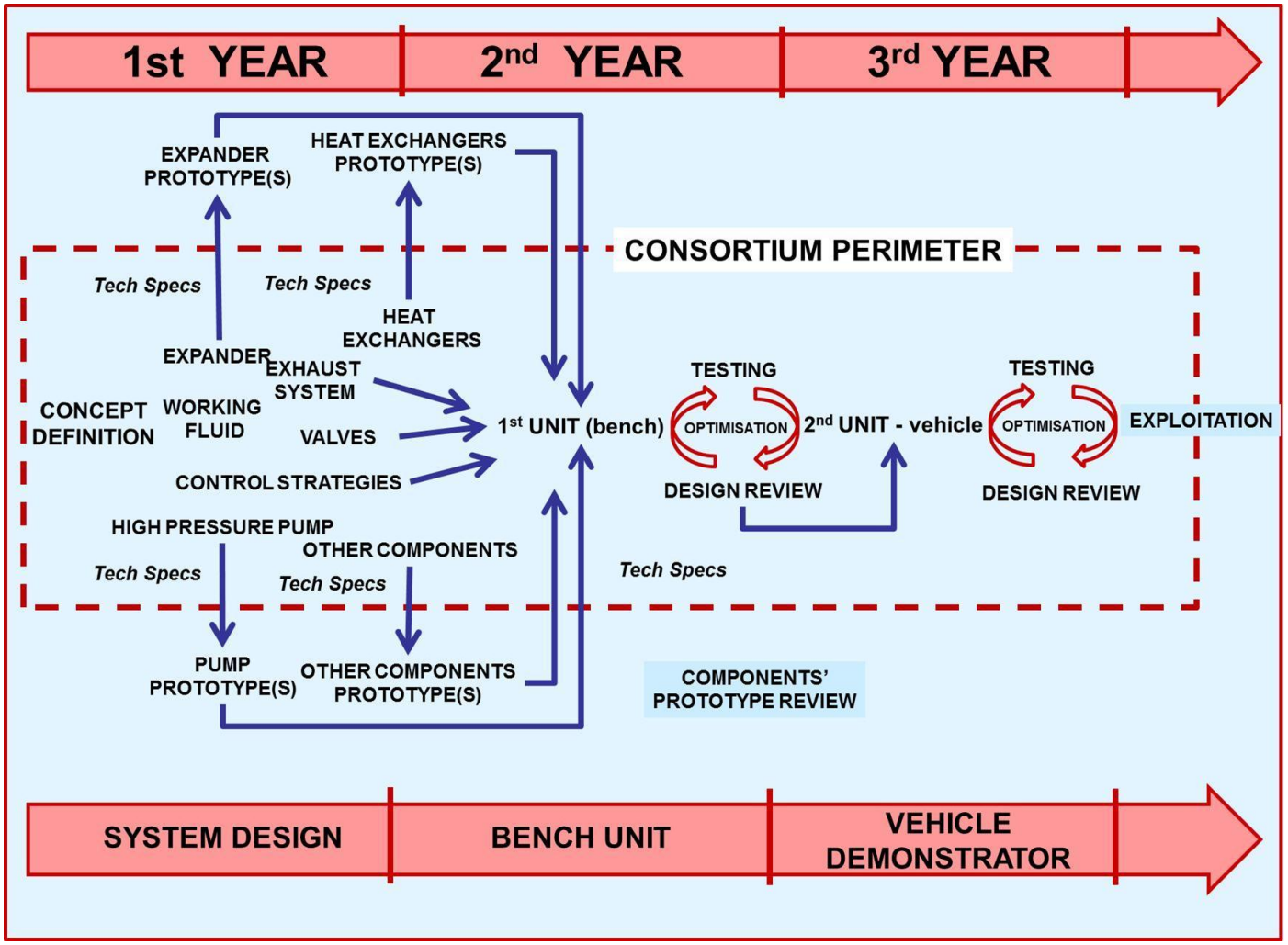

The system components will specified and identified within the project consortium and procured cooperating with to- be selected suppliers

Partners Role

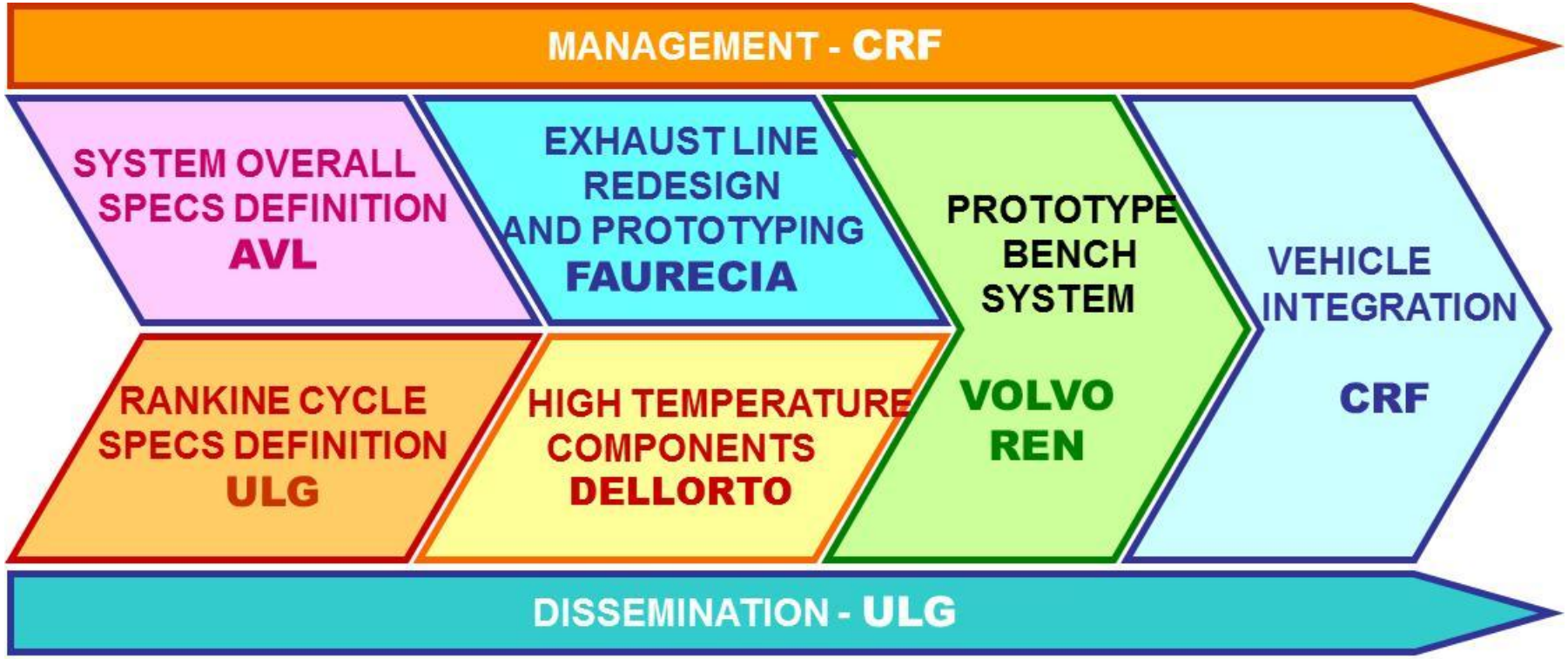

Approach

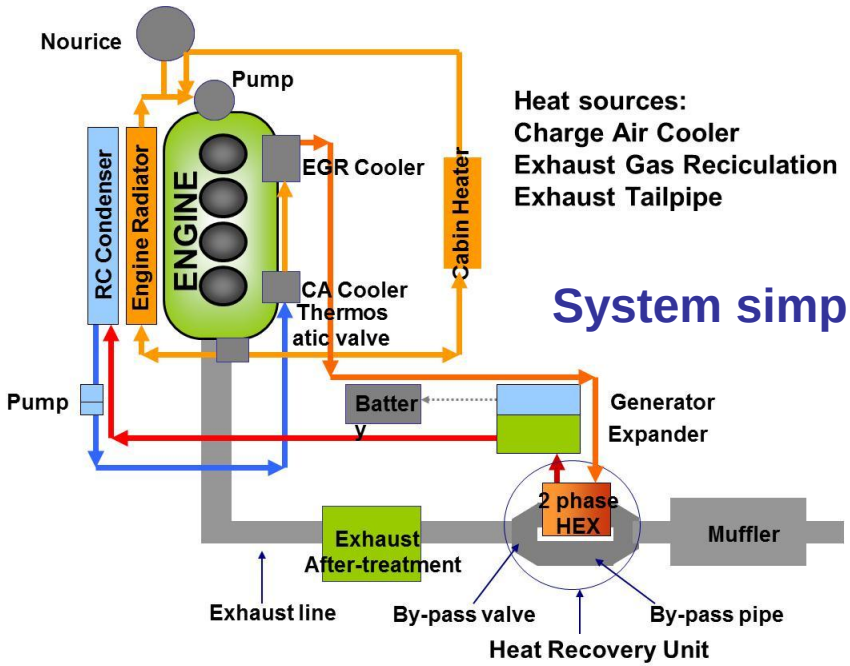

Heat sources:
Charge Air Cooler
Exhaust Gas Reciculation
Exhaust Tailpipe

System simplified lay out

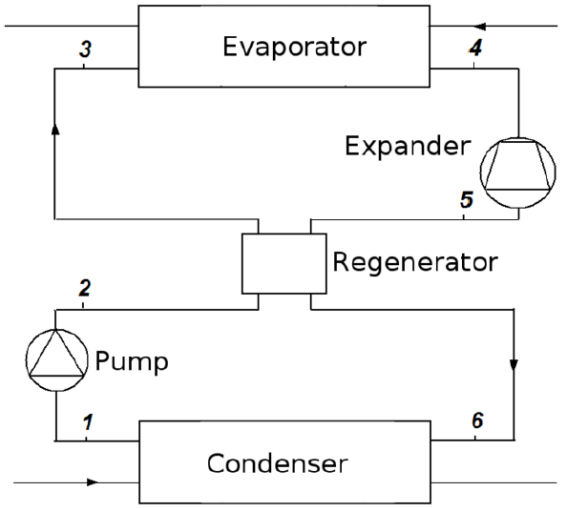

Rankine cycle scheme

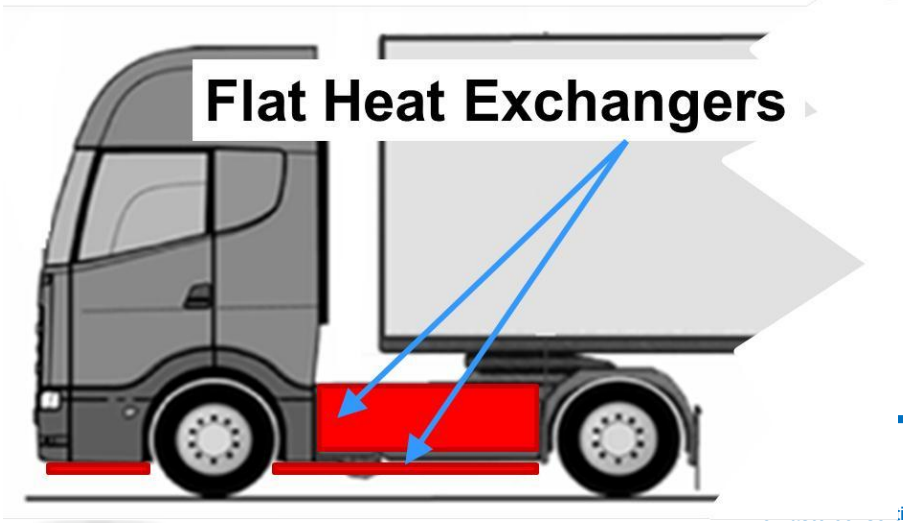

Flat Heat Exchangers (see TIFFE project) will be adopted to enhance the on board heat rejection capacity

Expected Final Results and their Use/Impact

- The waste heat recovery system components
- A an engine test rig with the waste heat recovery installed and fully validated
- A vehicle with a waste heat recovery unit installed and validated on board

The NoWaste system and components will be basis for a new generation of heat recovery and re-use unit for heavy and light duty commercial vehicles and buses.

The same system could be then applied to off-road vehicle.

Work in Progress - Components

Contacting several suppliers

Technologies and suppliers

- Expander: Barbers Nichols, Mohawk Innovative Tech, Mattei, Sanden
- High pressure pump: Mattei, Barbers Nichols
- Heat Exchangers: Behr, Modine
- Evaporator: Behr, Modine, Benteler

Status

- The heat exchangers technology is being to be identified as well as the suppliers
- The expander technology is a bit more critical but nevertheless a panel of potential suppliers has been identified
- The high pressure pump is at present the most critical element and there a suitable component has been not still identified

Work in Progress - Components

Scroll expander

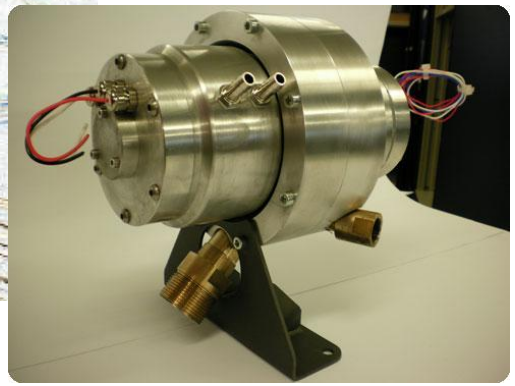

Turbine

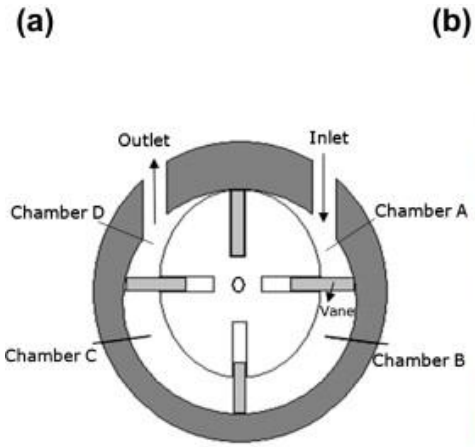

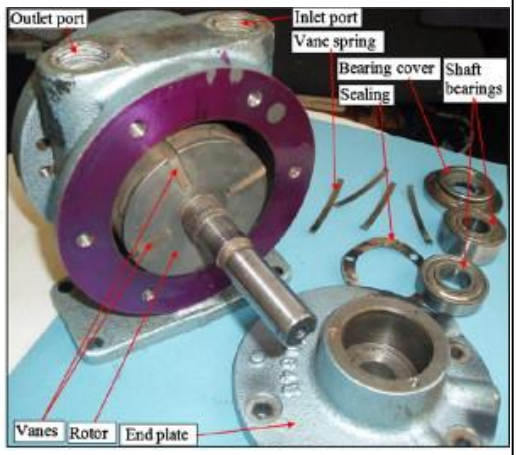

Vane expander

Work in Progress - Components

Pump

Tail pipe boilers

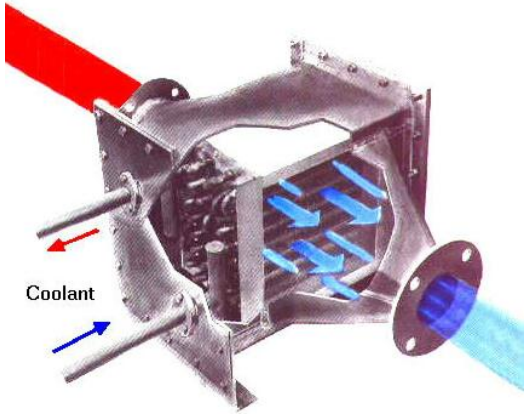

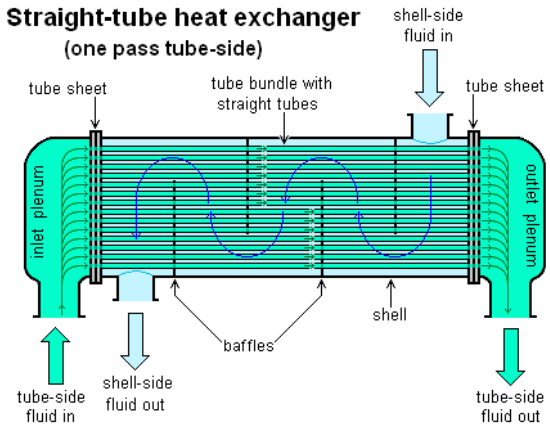

Condensers

THANK YOU!